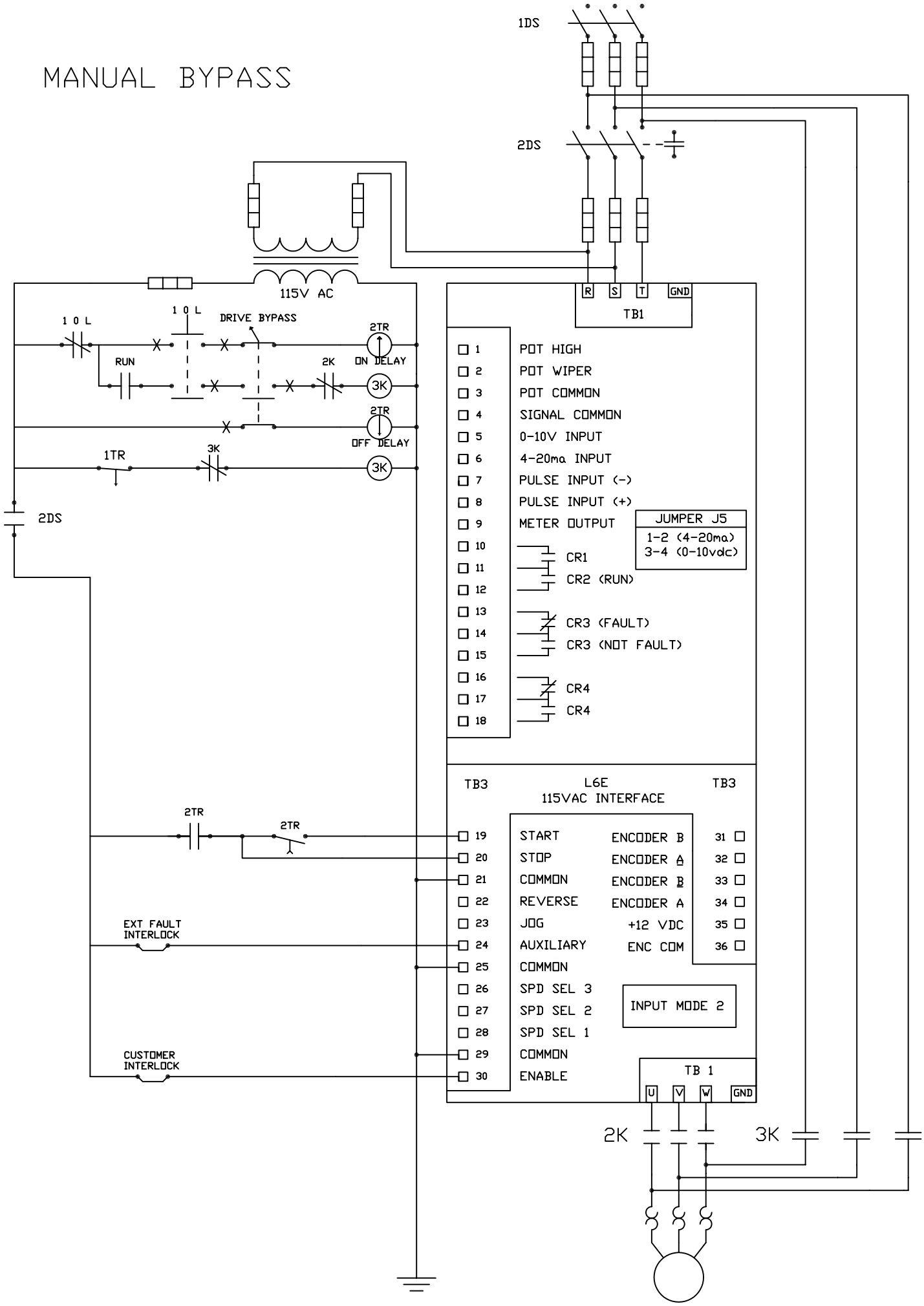# MANUAL BYPASS