REGULATOR TO POWER INTERFACE BOARD SCHEMATIC

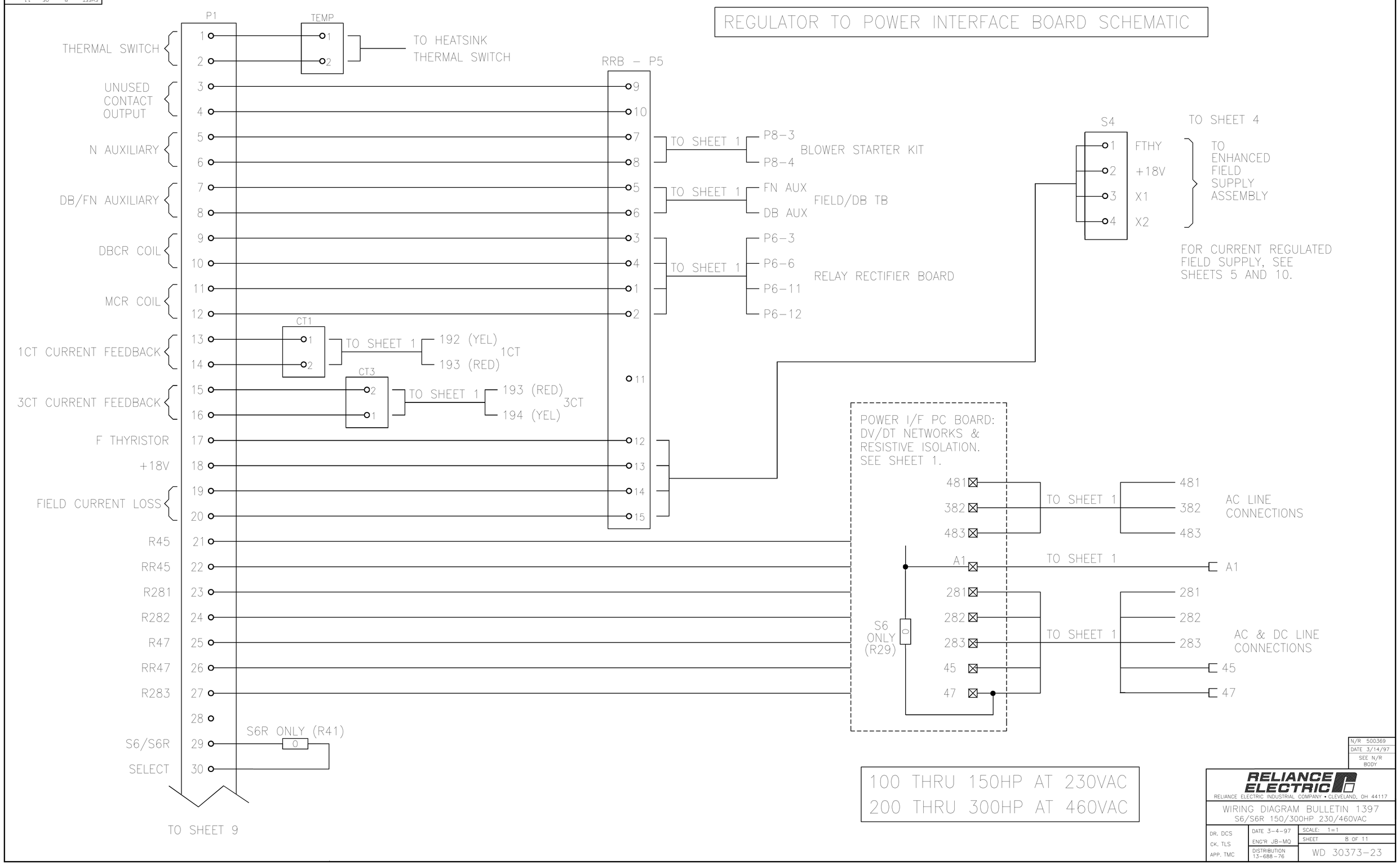

100 THRU 150HP AT 230VAC
200 THRU 300HP AT 460VAC

N/R 500369
DATE 3/14/97
SEE N/R BODY

RELIANCE ELECTRIC
RELIANCE ELECTRIC INDUSTRIAL COMPANY • CLEVELAND, OH 44117

WIRING DIAGRAM BULLETIN 1397
S6/S6R 150/300HP 230/460VAC

DR. DCS	DATE 3-4-97	SCALE: 1=1
CK. TLS	ENG'R JB-MQ	SHEET 8 OF 11
APP. TMC	DISTRIBUTION 13-688-76	WD 30373-23