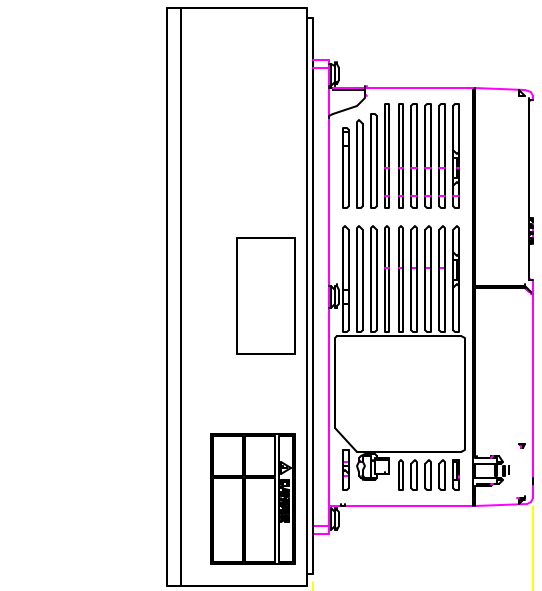

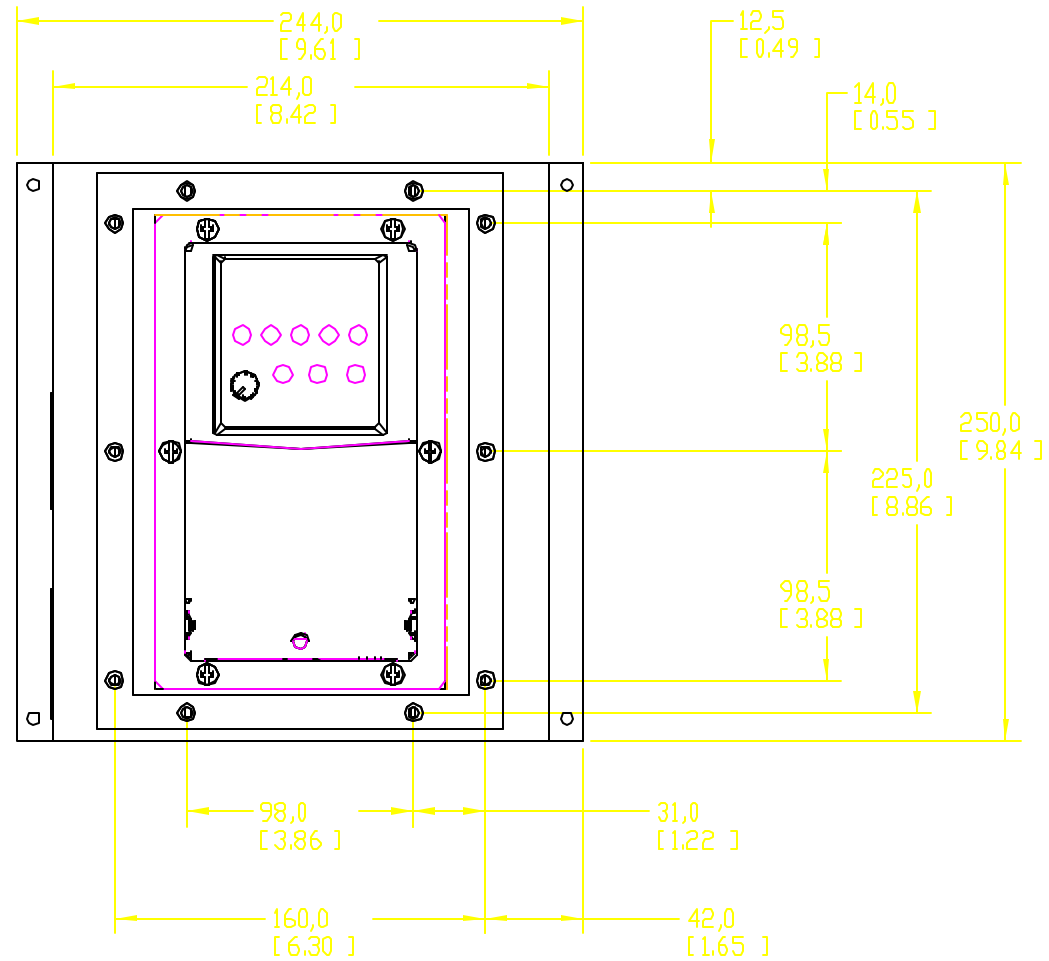

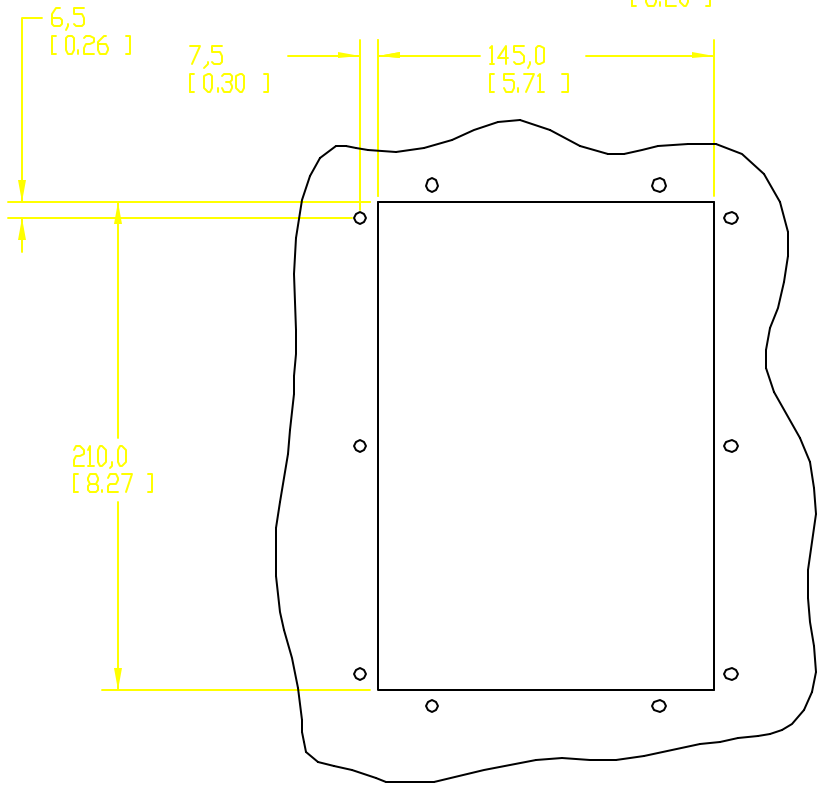

PANEL CUT-OUT

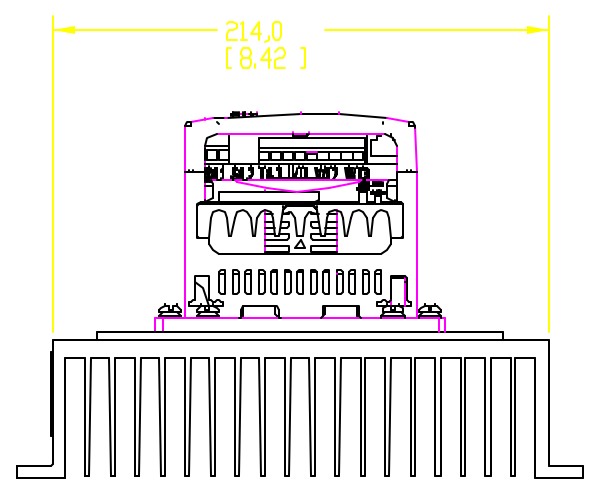

REFERENCES		PF 4_40 FLANGE MOUNT OUTLINE DRAWING		THIS DRAWING IS THE PROPERTY OF ROCKWELL AUTOMATION, INC. OR ITS SUBSIDIARIES AND MAY NOT BE COPIED, USED OR DISCLOSED FOR ANY PURPOSE EXCEPT AS AUTHORIZED IN WRITING BY ROCKWELL AUTOMATION, INC.
REVISION AUTHORIZATION	DIMENSIONS APPLY BEFORE SURFACE TREATMENT DIMENSIONS IN MILLIMETERS TOLERANCES UNLESS OTHERWISE SPECIFIED	Rockwell Automation		
	.X±			
	.XX±	DR. SHERBINOW	DATE 09-10-04	SHEET 2 OF 3
	ANGLES±	CHKD.	DATE	DWG SIZE C — PF4_40_BFRM_OUTLINE
	SCALE 0.5	APPD.	DATE	

PARTS MUST CONFORM TO APPLICABLE ROCKWELL AUTOMATION MANUFACTURING STANDARDS

CAD DOCUMENT

FILE NAME: OUTLINE_CHASSIS_MTG