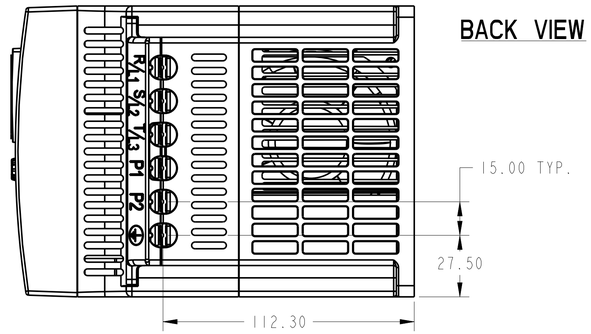

BACK VIEW

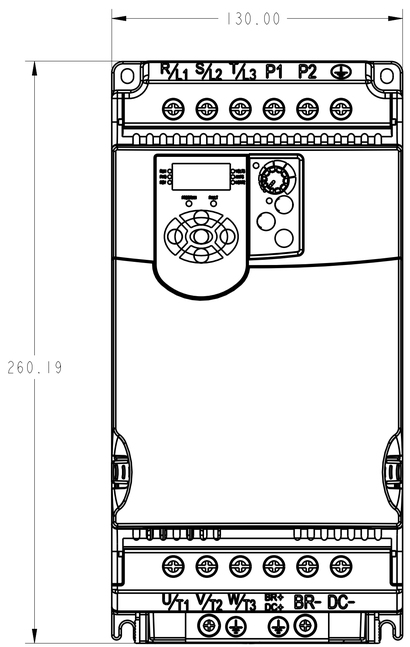

SCALE 0.750

TOP VIEW

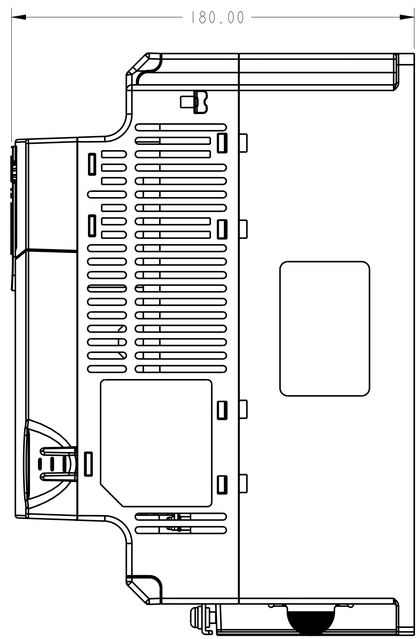

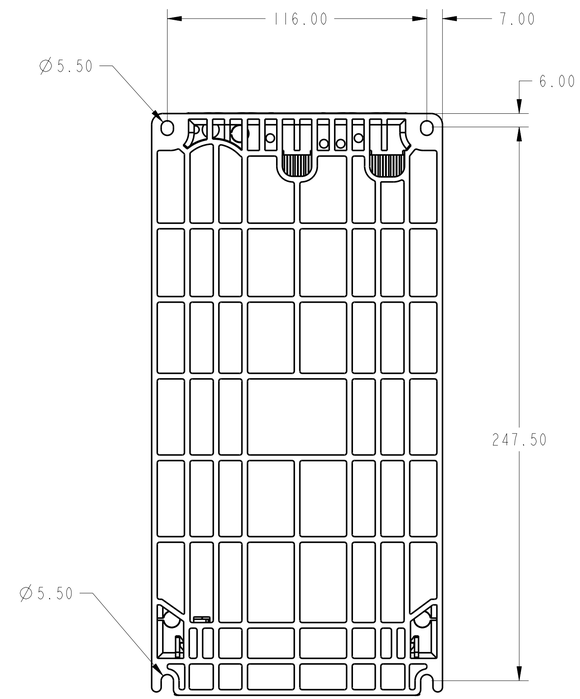

BOTTOM VIEW

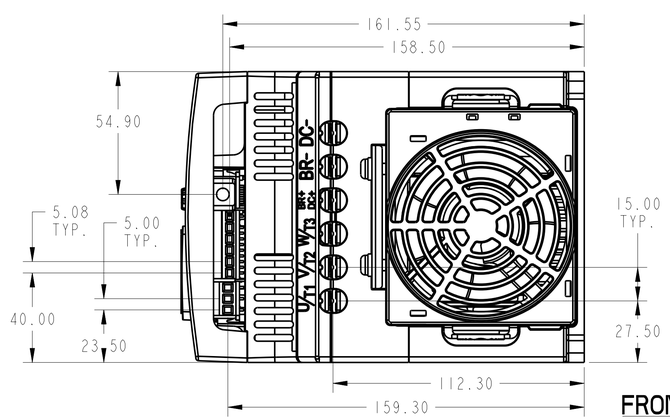

FRONT VIEW

PARTS MUST CONFORM TO APPLICABLE ROCKWELL AUTOMATION MANUFACTURING STANDARDS

CAD DOCUMENT

FILE NAME: PF4M_C_OUTLINE

REFERENCES				
REVISION AUTHORIZATION	DIMENSIONS APPLY BEFORE SURFACE TREATMENT DIMENSIONS IN MILLIMETERS TOLERANCES UNLESS OTHERWISE SPECIFIED	PF4M C OUTLINE		CONFIDENTIAL AND PROPRIETARY INFORMATION THIS DOCUMENT CONTAINS CONFIDENTIAL AND PROPRIETARY INFORMATION OF ROCKWELL AUTOMATION, INC. AND MAY NOT BE USED, COPIED OR DISCLOSED TO OTHERS, EXCEPT WITH THE AUTHORIZED WRITTEN PERMISSION OF ROCKWELL AUTOMATION, INC.
	.X:± N/A	Rockwell Automation		
	.XX:± N/A	DR. CDS	DATE 03-27-07	SHEET 1 OF 1
	ANGLES:± N/A	CHKD.	DATE	DWG. SIZE D — PF4M C OUTLINE
01 03/29/07		APPD.	DATE	