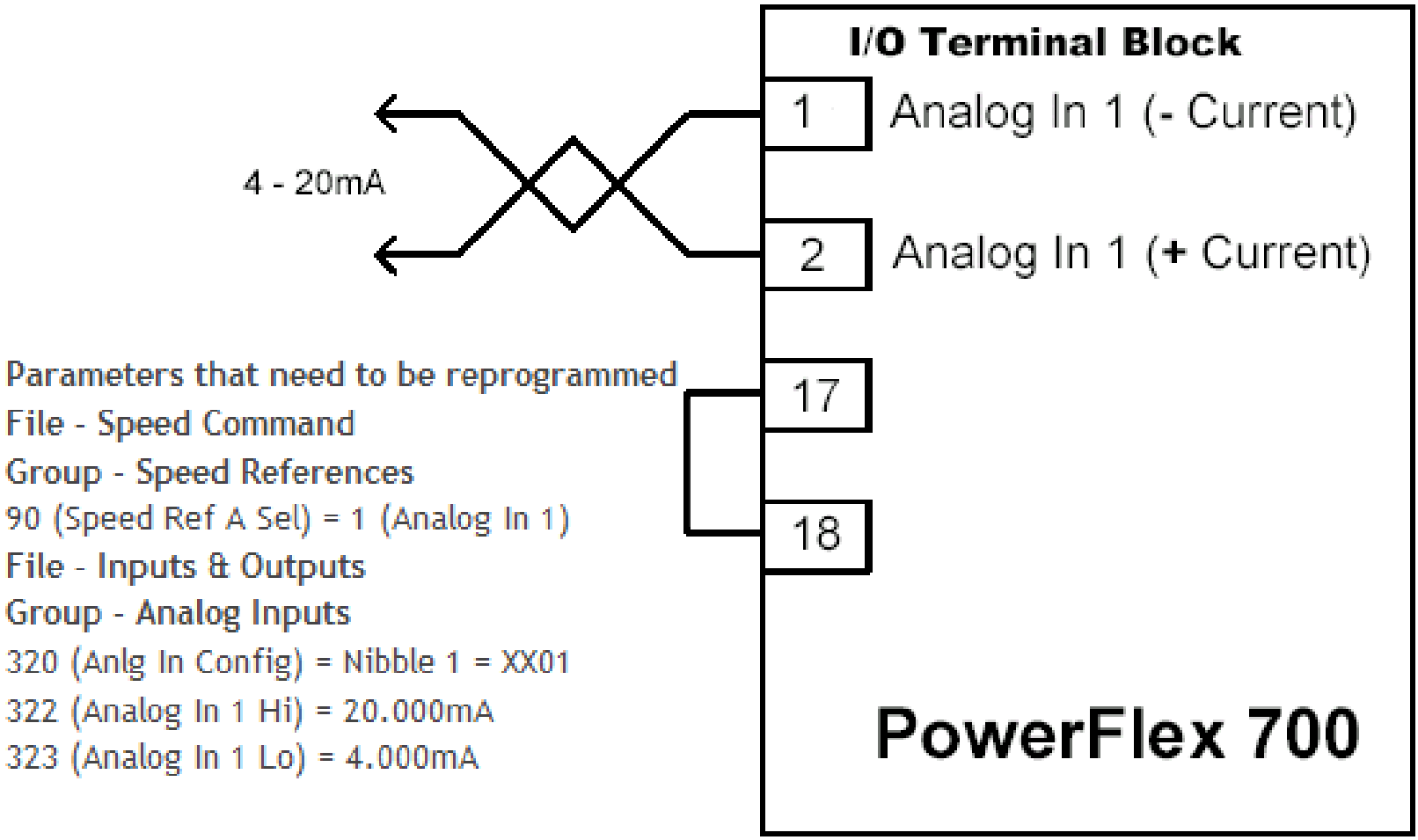

Parameters that need to be reprogrammed
File - Speed Command
Group - Speed References
90 (Speed Ref A Sel) = 1 (Analog In 1)
File - Inputs & Outputs
Group - Analog Inputs
320 (Anlg In Config) = Nibble 1 = XX01
322 (Analog In 1 Hi) = 20.000mA
323 (Analog In 1 Lo) = 4.000mA

OR

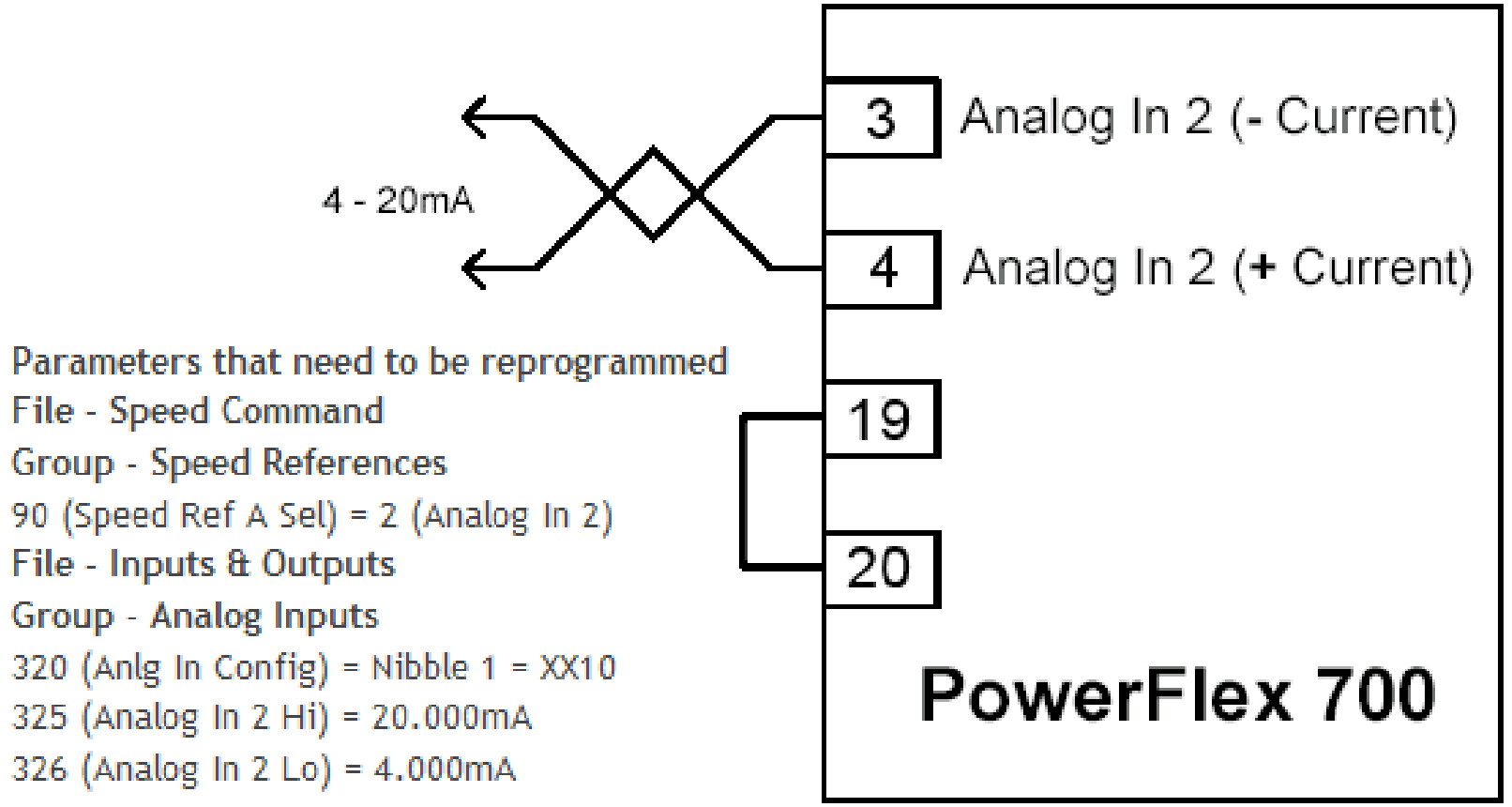

Parameters that need to be reprogrammed
File - Speed Command
Group - Speed References
90 (Speed Ref A Sel) = 2 (Analog In 2)
File - Inputs & Outputs
Group - Analog Inputs
320 (Anlg In Config) = Nibble 1 = XX10
325 (Analog In 2 Hi) = 20.000mA
326 (Analog In 2 Lo) = 4.000mA